Vehicle History Report

VEHICLE DETAILS

Chassis number [1]:	CKV36-700193
Manufacture date:	2010-03
Make:	NISSAN
Model:	SKYLINE
Body:	DBA-CKV36
Grade:	370GT
Engine:	VQ37VHR
Drive:	2WD
Transmission:	AT

Title information [2]:	**Deregistered to Export**	✓
Accident / Repair:	**No problem**	✓
Odometer rollback:	**No problem**	✓
Manufacturer recall:	**No problem**	✓
Safety grade [3]:	★★★★★★	✓
Contamination risk:	**No problem**	✓

This CAR VX Vehicle History Report is based only on Information supplied to CAR VX, LTD and available as of 2026-10-24 20:02:59. The information may vary depending on the data received from our data providers. Some data may be incomplete or unavailable due to human error, information that was not digitized at the time, or data that was simply not reported to the databases. This report should be used as a decision-support tool alongside a vehicle inspection and test drive.

ACCIDENT / REPAIR HISTORY

Problem type	Reported	Date reported	Data source	Details	Airbag
Collision	Not reported				
Malfunction	Not reported				
Theft	Not reported				
Fire damage	Not reported				
Water damage	Not reported				
Hail damage	Not reported				

ODOMETER READINGS HISTORY

Date reported	Data source	Odometer reading (Km)
2023-06-19	MLIT	82700
2025-05-30	MLIT	108600
2026-10-10	USS Kyushu	127125

USE HISTORY

Use in the contaminated regions [4]	Radioactive contamination test fail [5]	Commercial use
Not reported	Not reported	Not reported

DETAILED HISTORY

Event date	Location	Odometer reading (Km)	Data source	Details
2010-03			NISSAN	Manufactured
2010-03			MLIT	First registration
2023-06-19		82700	MLIT	Inspection
2025-05-30	Fukuoka	108600	MLIT	Inspection
2026-10-10	Saga	127125	USS Kyushu	Auctioned

2026-10-16	Fukuoka	MLIT	Last registration

MANUFACTURER RECALL HISTORY

Date reported	Data source	Affected part	Details
Not reported			

VEHICLE ASSESSMENT [6]

Overall Collision Safety Ratings

Driver's seat			Front passenger's seat		
Points	Evaluation	Goal average	Points	Evaluation	Goal average
32.15	★★★★★★	89%	22.43	★★★★★★	94%

* In order to accurately differentiate between the evaluations of different vehicles, a standard is set based on current technology. Up to 6 points out of 12 is given level 1 and the rest of the range is divided up into equal parts, which are respectively assigned to level 2 (more than 6 points but 7.5 or less), level 3 (more than 7.5 points but 9 or less), level 4 (more than 9 points but 10.5 or less) or level 5 (more than 10.5 points).

Braking performance tests [7]

Dry road		42.8 m
Wet road		46.5 m

VEHICLE SPECIFICATION

1st gear ratio	4.923	**2nd gear ratio**	3.193
3rd gear ratio	2.042	**4th gear ratio**	1.411
5th gear ratio	1.000	**6th gear ratio**	0.862 7 SPEED0.771
Additional notes	-	**Airbag position, capacity**	-
Body rear overhang	860	**Body type**	COUPE

Chassis number embossing position	COWL TOP PANEL RIGHT SIDE	**Classification code**	0058
Cylinders	V6 LENGTHWAY	**Displacement**	3690
Electric engine type	-	**Electric engine maximum output**	-
Electric engine maximum torque	-	**Electric engine power**	-
Engine maximum power	245/7000(NET)	**Engine maximum torque**	363/5200(NET)
Engine model	VQ37VHR	**Frame type**	SOLID STRUCTURE
Front shaft weight	910	**Front shock absorber type**	
Front stabilizer type	TORSION BAR TYPE	**Front tires size**	225/50R18 95W 225/45R19 92W 245/45R18 96W OTHER
Front tread	1545	**Fuel consumption**	9.7
Fuel tank equipment	80	**Grade**	370GT
Height	1390	**Length**	4655
Main brakes type	HYDRAULIC TYPE DISK HYDRAULIC TYPE DISK	**Make**	NISSAN
Maximum speed	180	**Minimum ground clearance**	130
Minimum turning radius	5.5	**Model**	SKYLINE
Model code	DBA-CKV36	**Mufflers number**	
Rear shaft weight	720	**Rear shock absorber type**	
Rear stabilizer type	TORSION BAR TYPE	**Rear tires size**	225/50R18 95W 225/45R19 92W 245/45R18 96W OTHER
Rear tread	1560	**Reverse ratio**	3.972
Riding capacity	4	**Side brakes type**	
Specification code	15916	**Stopping distance**	47(100)
Transmission type	AT	**Weight**	1630
Wheel alignment	2WD	**Wheelbase**	2850

Width	1820

AUCTION DATA

Date: 2026-10-10, Auction: USS Kyushu, Lot #: 90042

Date:	2026-10-10	Lot #:	90042
Auction name:	USS Kyushu	Region:	Saga
Make:	NISSAN	Model:	SKYLINE
Reg. year:	2010	Mileage (km):	127125
Displacement (cc):	3700	Transmission:	FA
Color:	SILVER	Model code:	CKV36
Result:	available	Auction grade:	4
Problem type:	No problem	Problem scale:	None
Contaminated:	No	Airbag:	OK

PHOTOS AND AUCTION SHEETS

ロープライス売切コーナー

90042	車歴(自家用以外は記入)	排気量 3700	型式 DBA-CKV36		評価点 4
	初度登録年月 H22/3月	車名 日度 スカイライン	型式 F7型 CP	グレード 370GT	駆動 2WD
					内装 B

車検 R9年 6月 20日	シフト FAT	利用品 SR 純AW PS PW カワ TV ナビ エアB	
走行 127,125 km	冷房 AAC	セールスポイント	
外色 元色 色値 シルバー →	カラーNo. K23	・ユーザー買取車	
燃料 ガソリン	内装色		
輸入車用 年式	輸入区分	ハンドル	
		月 日	
リサイクル預託金 11,770円	乗車定員 4人	積載量 t	登録No. 北九州 330 む 8807
			車台No. CKV36-700193
			シリアルNo.

○注意事項(診断・不具合箇所および状態等)

・ハーフレザーシート

・プッシュスタート

・スマートキー

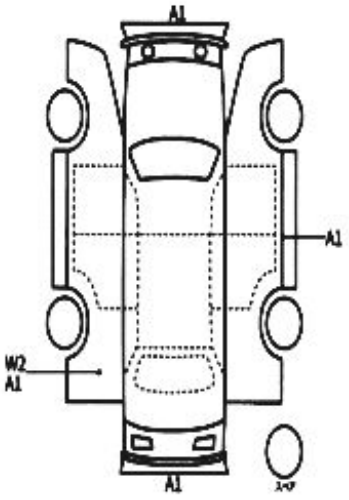

○検査員報告

ルーム内一部汚れキズ

シートシワ

ホイールキズ

小キズ小凹

[荷台内寸]約 × × (cm)

長さ cm	幅 cm	高さ cm

GLOSSARY

[1] **Chassis number** – a unique identification number of the vehicle in Japan (same as VIN in the USA or Europe)

[2] **Title information:**
Registered – qualified for driving in Japan
Deregistered Temporarily – not qualified for driving in Japan, usually a temporary title during the ownership change
Deregistered Completely – not qualified for driving in Japan, the vehicle is determined to be scrapped
Deregistered to Export – not qualified for driving in Japan , the vehicle is determined to be exported

[3] **Determining the overall collision safety performance evaluation** – For the driver's seat, the results of the full-wrap frontal collision test, offset frontal collision test, and side collision test are added together and evaluated to 6 different levels. For the Frontal passenger's seat, the results of the full-wrap frontal collision test and the side collision test (results for the driver's or the front passenger's seat are used) are added together and evaluated to 6 different levels.

Regular vehicle inspection – All vehicles in Japan must undergo regular vehicle inspections (shaken). New cars need to be tested after three years, and then vehicles must be tested every two years thereafter. A vehicle inspection (shaken) is compulsory for all vehicles with an engine size over 250cc. It ensures that all vehicles on the road are properly maintained and safe to drive. The test also checks that vehicles have not been illegally modified; if they are found to have been modified, they are not allowed on the road.

[4] **Use in the contaminated regions** – The Fukushima Daiichi nuclear disaster was a catastrophic failure at the Fukushima I Nuclear Power Plant on 11 March 2011, resulting in a meltdown of three of the plant's six nuclear reactors. As a result, some areas in the following prefectures were contaminated: Fukushima, Miyagi, Ibaraki, Tochigi.

[5] **Radioactive contamination test** – radioactive contamination inspection that was started in July 2011 as a preventive measure for exporting contaminated vehicles from Japan. The inspection is being conducted since in all sea ports of Japan under the supervision of The Japan Harbor Transportation Association (JHTA).

MLIT – Ministry of Land, Infrastructure, Transport and Tourism.

[6] **Japan New Car Assessment Program** – the Ministry of Land, Infrastructure, Transport and Tourism (MLIT) and the National Agency for Automotive Safety & Victims' Aid (NASVA) have taken measures for safety, one of which is to assess commercially available vehicles through a variety of safety performance tests and release the resulting information compiled into the "New Car Assessment Program". The objective of Japan New Car Assessment Program is to increase the use of safe automobiles by providing an environment in which users can easily select such vehicles. This also promotes the development of safer vehicles by automobile manufacturers. Neck injury protection for rear-end collision performance test , rear seat passenger's protection for frontal collision performance test, rear passenger's seat belt usability evaluation test and seat belt reminder for passengers evaluation test are started in FY2009.

[7] **Braking Performance Tests** – Braking performance is determined by the shortness of the distance in which a vehicle can stop and the stability of the vehicle at the time of braking. This test is performed under wet and dry road conditions for a vehicle which has both a driver and a front passenger. The distance it takes for the vehicle to stop and the stability of the vehicle at the time of braking is evaluated for when the vehicle is stopped abruptly while traveling at a speed of 100km/h. The stopping distance and vehicle speed have been measured by using GPS since FY2009.

CAR VX, LTD DEPENDS ON ITS SOURCES FOR THE ACCURACY AND RELIABILITY OF ITS INFORMATION.

THEREFORE, NO RESPONSIBILITY IS ASSUMED BY CAR VX, LTD OR ITS AGENTS FOR ERRORS OR OMISSIONS IN THIS REPORT. CAR VX, LTD FURTHER EXPRESSLY DISCLAIMS ALL WARRANTIES, EXPRESSED OR IMPLIED, INCLUDING ANY IMPLIED WARRANTIES OF MERCHANTABILITY OR FITNESS FOR A PARTICULAR PURPOSE.

© 2014-2026 Car VX Limited. All rights reserved.