Vehicle History Report

VEHICLE DETAILS

Chassis number [1]:	Z33-504132
Manufacture date:	2008-09
Make:	NISSAN
Model:	FAIRLADY Z
Body:	CBA-Z33
Grade:	VERSION S-T
Engine:	VQ35HR
Drive:	2WD
Transmission:	AT

Title information [2]:	**Deregistered to Export**	✓
Accident / Repair:	**No problem**	✓
Odometer rollback:	**No problem**	✓
Manufacturer recall:	**No problem**	✓
Safety grade [3]:	**No data**	✓
Contamination risk:	**No problem**	✓

This CAR VX Vehicle History Report is based only on Information supplied to CAR VX, LTD and available as of 2026-10-23 11:52:09. The information may vary depending on the data received from our data providers. Some data may be incomplete or unavailable due to human error, information that was not digitized at the time, or data that was simply not reported to the databases. This report should be used as a decision-support tool alongside a vehicle inspection and test drive.

ACCIDENT / REPAIR HISTORY

Problem type	Reported	Date reported	Data source	Details	Airbag
Collision	Not reported				
Malfunction	Not reported				
Theft	Not reported				
Fire damage	Not reported				
Water damage	Not reported				
Hail damage	Not reported				

ODOMETER READINGS HISTORY

Date reported	Data source	Odometer reading (Km)
2011-11-02	JAA	28456
2011-11-10	USS Tokyo	28465
2023-09-23	USS Okayama	93375
2023-11-21	MLIT	93400
2025-03-08	USS Kyushu	98619
2025-10-28	MLIT	103700
2026-10-08	USS Tokyo	112901

USE HISTORY

Use in the contaminated regions [4]	Radioactive contamination test fail [5]	Commercial use
Not reported	Not reported	Not reported

DETAILED HISTORY

Event date	Location	Odometer reading (Km)	Data source	Details
2008-09			NISSAN	Manufactured

2008-09			MLIT	First registration
2011-11-02	Tokyo	28456	JAA	Auctioned
2011-11-10	Chiba	28465	USS Tokyo	Auctioned
2023-09-23	Okayama	93375	USS Okayama	Auctioned
2023-11-21		93400	MLIT	Inspection
2025-03-08	Saga	98619	USS Kyushu	Auctioned
2025-10-28	Fukuoka	103700	MLIT	Inspection
2026-10-08	Chiba	112901	USS Tokyo	Auctioned
2026-10-19	Fukuoka		MLIT	Last registration

MANUFACTURER RECALL HISTORY

Date reported	Data source	Affected part	Details
Not reported			

VEHICLE ASSESSMENT [6]

Overall Collision Safety Ratings

Driver's seat			Front passenger's seat		
Points	Evaluation	Goal average	Points	Evaluation	Goal average
0		0%	0		0%

* In order to accurately differentiate between the evaluations of different vehicles, a standard is set based on current technology. Up to 6 points out of 12 is given level 1 and the rest of the range is divided up into equal parts, which are respectively assigned to level 2 (more than 6 points but 7.5 or less), level 3 (more than 7.5 points but 9 or less), level 4 (more than 9 points but 10.5 or less) or level 5 (more than 10.5 points).

Braking performance tests [7]

Dry road 

Wet road 

VEHICLE SPECIFICATION

1st gear ratio	3.841	**2nd gear ratio**	2.352
3rd gear ratio	1.529	**4th gear ratio**	1.000
5th gear ratio	0.839	**6th gear ratio**	-
Additional notes	BACK: LIMITED SLIP DIFFERENTIAL	**Airbag position, capacity**	-
Body rear overhang	755	**Body type**	COUPE
Chassis number embossing position	COWL TOP PANEL CENTRE	**Classification code**	0166
Cylinders	V6 LENGTHWAY	**Displacement**	3490
Electric engine type	-	**Electric engine maximum output**	-
Electric engine maximum torque	-	**Electric engine power**	-
Engine maximum power	313ps(230kW)/6800rpm	**Engine maximum torque**	36.5kg· m(358N· m)/4800rpm
Engine model	VQ35HR	**Frame type**	SOLID STRUCTURE
Front shaft weight	820	**Front shock absorber type**	
Front stabilizer type	TORSION BAR TYPE	**Front tires size**	225/45R18 91W
Front tread	1535	**Fuel consumption**	9.2
Fuel tank equipment	80	**Grade**	VERSION S-T
Height	1315	**Length**	4315
Main brakes type	HYDRAULIC TYPE DISK HYDRAULIC TYPE DISK	**Make**	NISSAN
Maximum speed	180	**Minimum ground clearance**	120
Minimum turning radius	5.4	**Model**	FAIRLADY Z
Model code	CBA-Z33	**Mufflers number**	
Rear shaft weight	690	**Rear shock absorber type**	
Rear stabilizer type	TORSION BAR TYPE	**Rear tires size**	245/45R18 96W

Rear tread	1540	**Reverse ratio**	2.764
Riding capacity	2	**Side brakes type**	
Specification code	12668	**Stopping distance**	46(100)
Transmission type	AT	**Weight**	1510
Wheel alignment	2WD	**Wheelbase**	2650
Width	1815		

AUCTION DATA

Date: 2011-11-02, Auction: JAA, Lot #: 1205

Date:	2011-11-02	Lot #:	1205
Auction name:	JAA	Region:	Tokyo
Make:	NISSAN	Model:	
Reg. year:	2008	Mileage (km):	28456
Displacement (cc):	3500	Transmission:	FA
Color:	BLACK	Model code:	Z33
Result:	unsold	Auction grade:	4.5
Problem type:	No problem	Problem scale:	None
Contaminated:	No	Airbag:	OK

Date: 2011-11-10, Auction: USS Tokyo, Lot #: 20535

Date:	2011-11-10	Lot #:	20535
Auction name:	USS Tokyo	Region:	Chiba
Make:	NISSAN	Model:	
Reg. year:	2008	Mileage (km):	28465
Displacement (cc):	3500	Transmission:	AT
Color:	BLACK	Model code:	Z33
Result:	unsold	Auction grade:	4.5
Problem type:	No problem	Problem scale:	None
Contaminated:	No	Airbag:	OK

Date: 2023-09-23, Auction: USS Okayama, Lot #: 7139

Date:	2023-09-23	Lot #:	7139
Auction name:	USS Okayama	Region:	Okayama
Make:	NISSAN	Model:	FAIRLADY Z
Reg. year:	2008	Mileage (km):	93375
Displacement (cc):	3500	Transmission:	FA
Color:	BLACK	Model code:	Z33
Result:	available	Auction grade:	4
Problem type:	No problem	Problem scale:	None
Contaminated:	No	Airbag:	OK

Date: 2025-03-08, Auction: USS Kyushu, Lot #: 80722

Date:	2025-03-08	Lot #:	80722
Auction name:	USS Kyushu	Region:	Saga
Make:	NISSAN	Model:	FAIRLADY Z
Reg. year:	2008	Mileage (km):	98619
Displacement (cc):	3500	Transmission:	FA
Color:	BLACK	Model code:	Z33
Result:	available	Auction grade:	4.5
Problem type:	No problem	Problem scale:	None
Contaminated:	No	Airbag:	OK

Date: 2026-10-08, Auction: USS Tokyo, Lot #: 29291

Date:	2026-10-08	Lot #:	29291
Auction name:	USS Tokyo	Region:	Chiba
Make:	NISSAN	Model:	FAIRLADY Z
Reg. year:	2008	Mileage (km):	112901
Displacement (cc):	3500	Transmission:	FA
Color:	BLACK	Model code:	Z33
Result:	available	Auction grade:	4
Problem type:	No problem	Problem scale:	None

Contaminated:	No	Airbag:	OK

PHOTOS AND AUCTION SHEETS

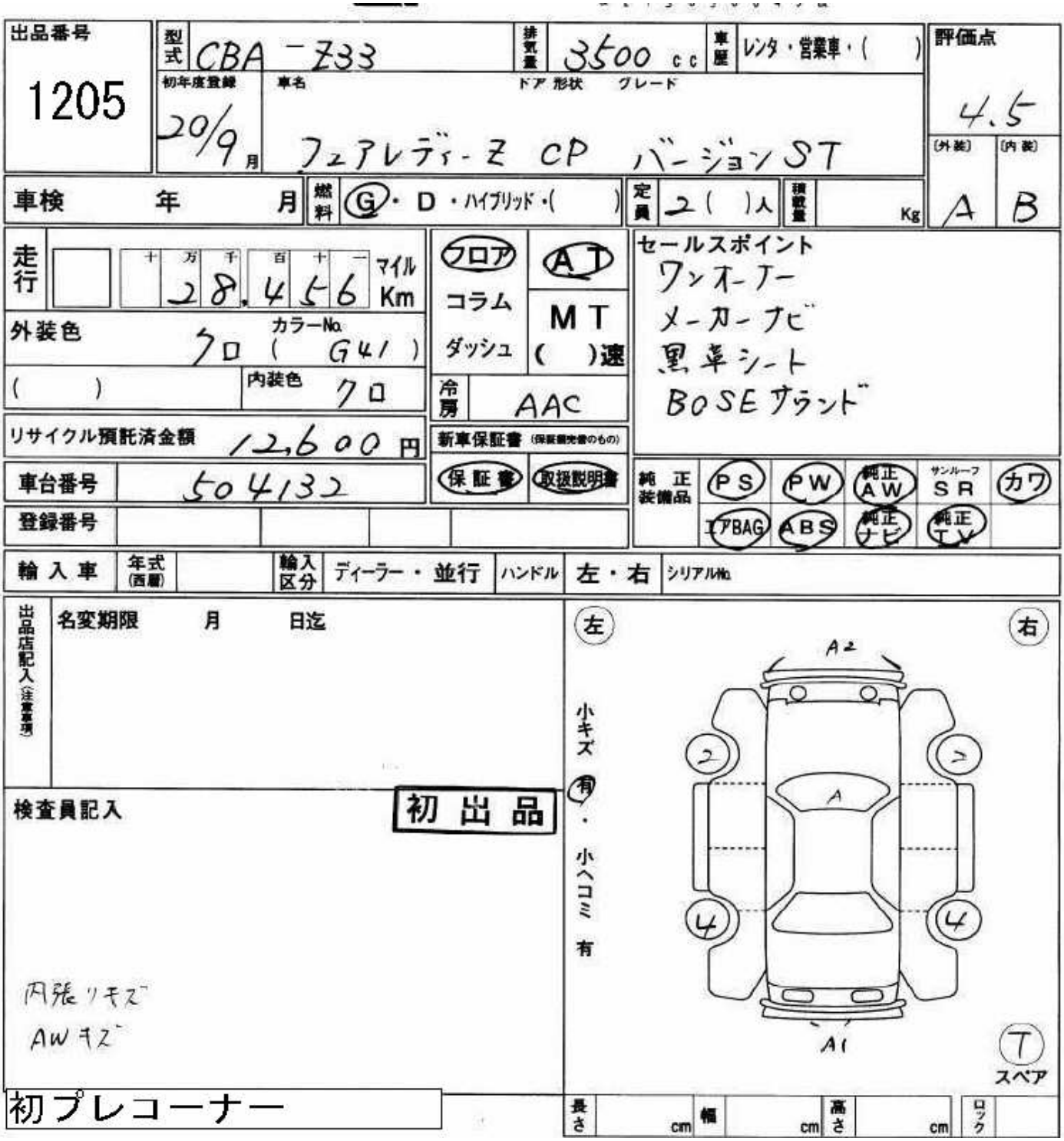

出品番号 1205

型式 CBA-Z33 | 排気量 3500 cc | 車屋 レンタ・営業車・( ) | 評価点 4.5

初年度登録 20/9月 | 車名 フェアレディ-Z CP バージョンST | ドア 形状 グレード

車検 年 月 | 燃料 G・D・ハイブリッド・( ) | 定員 2( )人 | 積載量 Kg | (外装) A | (内装) B

走行 十万 千 百 十 一 2 8 4 5 6 マイル Km

外装色 クロ | カラーNo. (G41)

( ) | 内装色 クロ

リサイクル預託済金額 12,600 円

車台番号 504132

登録番号

フロア AT | コラム | ダッシュ | MT ( )速

冷房 AAC

新車保証書 (保証書発行のもの) 保証書 取扱説明書

セールスポイント
ワンオーナー
メーカーナビ
黒革シート
BOSEサウンド

純正装備品 PS PW 純正AW サンルーフ SR カワ | エアBAG ABS 純正ナビ 純正TV

輸入車 年式(西暦) | 輸入区分 ディーラー・並行 | ハンドル 左・右 | シリアルNo.

出品店記入(注意事項) 名変期限 月 日迄

検査員記入 初出品

内張りキズ
AWキズ

初プレコーナー

左 右

小キズ 有・無 小ヘコミ 有

A2 A A1 2 2 4 4

T スペア

長さ cm | 幅 cm | 高さ cm | ロック





ワンオーナーコーナー

No.	車歴	排気量	型式	評価点
20535	自家用	3500 c.c.	CBA-Z33	4.5

初度登録年月	車名	完成・ドア数	グレード	2WD・4WD	内装補助評価
20/9 月	フェアレディZ	CP	バージョンST		B

車検	年 月	シフト	AT	装備品	SR / 純AW / PS / PW / カワ / TV / ナビ / エアB
走行	28.465 Km マイル	冷房	AAC	※純正品に限り該当に○をつけて下さい。	
外色	元色 70 → 色替	カラーNo.	G41	新車整備手帳（保証書付）	有・無
燃料	ガソリン・軽油・( )	内装色	70	※書類と一緒に保管下さい。	
輸入車用	年式	輸入区分	ハンドル	名義変更期限	月 日
		ディーラー・並行	左・右		

セールスポイント
ワンオーナー
メーカーナビ
黒革シート
BOSEサウンド

リサイクル預託金 12600 円 預託済み
※リサイクル預託金に資金管理料金は含まれません。

乗車定員	登録No.	
2 人	車台No.	504132
積載量 t	シリアルNo.	

◎注意事項（修復・不具合箇所および状態等）

◎検査員報告

シートスレ
AWキズ
右キズ日

内バリキズ

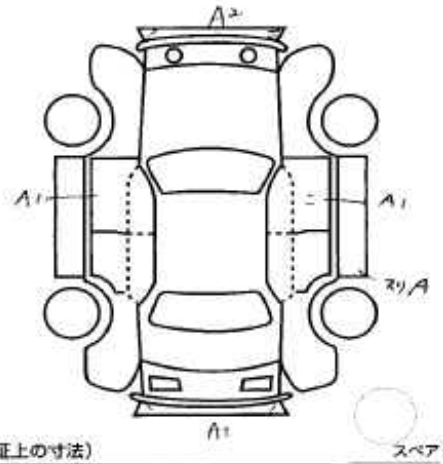

長さ cm 幅 cm 高さ cm ←（車検証上の寸法） スペア

※ご記入の際は油性ボールペンで強くご記入下さい。（水性ペンは使わないで下さい）




FAIRLADY Z



プレミアムコーナー

7139	車歴（自家用以外は記入） 自家用	排気量 3500cc	型式 CBA-Z33
	初度登録年月 車名 20/9月 フェアレディZ	排気量 3	グレード ハージョンST 2WD 4WD
評価点 4	内装 C		

※必ず適性ボールペンをご使用下さい。水性ボールペンは使用できません。

車検 R5年12月	シフト FAT	特記 SR 純AW PS PW	
走行 913.3 7.5	冷房 AAC	品 カウ TV ナビ エアB	
外色 元色	色種	カラー No. G41	セールスポイント ※V-ケーナビ ※BOSEサウンド ※黒レザーシート ※DNシートヤーター ※D-H用パワーシート ※地上版AW ※ビルトイ ETC ※キセノンライト
燃料 ガソリン・軽油	内装色	新車登録手帳（保証書付） 有・無	
輸入車用	車入送り ティーラー・並行	ハンドル 左・右	名義変更期限 月 日
リサイクル預託金 12600円	車庫交渉 2人	検査員	登録No. 倉敷 330 5 1616
			車台No. Z33-504132
			シリアルNo.

←特記品に当り該当に○をつけて下さい。

○注意事項（整備・不具合箇所および状態等）

※ユーザー買取車!!

○検査員報告（USS使用欄）

ハンドル シフトノブスレ シートシブスレ
室内汚れ キズ
ホイールキズ ドミラーゲーズキズ
Rゲートダンパー不良 ウスキズ(多)

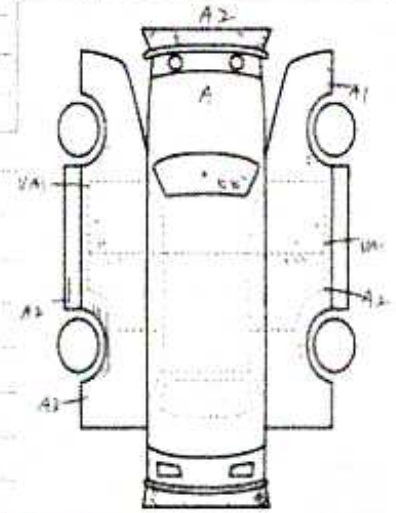

【荷台内寸】約 × × (cm)

長さ cm 幅 cm 高さ cm ←（車検証上の寸法） スペア







プライム&Dコーナー

80722	車型	排気量 3500	型式 CBA-Z33		評価点 4.5
	初度登録年月 H20/9月	車名 日産 フェアレディZ	ボディ形 CP	グレード バージョンST	駆動 2WD
					内装 8

車検 R7年11月27日	シフト FAT	機能	弦 / 純AM / PS / PW / カワ / TV / ナビ / エアロ
走行 98,619 km	冷房 AAC	セールスポイント	◎オークション初出品◎ユーザー直取 ◎フジツボマフラー ◎車高調ファイナルコレクション ◎ブレンボキャリパー ◎BOSEサウンドシステム
外色 先色 クロー / カラーNo G41	有		
燃料 ガソリン / 内装色			
輸入用 年式 / 輸入区分 / ハンドル	月 日		
リサイクル預託金 12,600円 / 2人		登録No 佐賀 332 ゆ 56	
◎注意事項		車台No Z33-504132	
		シリアルNo	

※保証・取扱

◎検査員特価

ルーム内汚れ

シートシワ

ホイール・Dミラーキズ

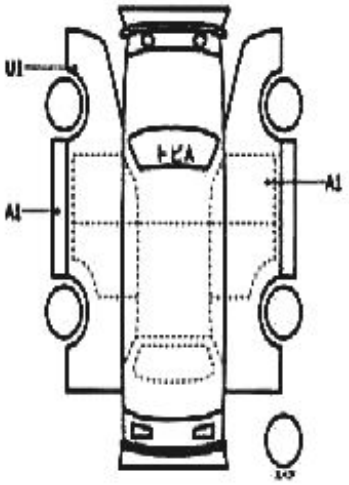

[荷台内寸]約 × × (cm)

長さ cm	幅 cm	高さ cm

プライムRコーナー

29291	車種	排気量 3500	型式 CBA-Z33		評価点 4
	初度登録年月 H20/9月	型名 日産 フェアレディZ	車両・ドア数 CP	グレード バージョンST	駆動 2WD
					内装 B

車検 R9年11月27日	シフト FAT	特定 SR (純AR) (PS) (PW) (カワ) TV (ナビ) (エアロ)	
走行 112,901 km	冷房 AAC	セールスポイント ユーザー買取 純正ナビ 車高調・社外マフラー スリットローター ブレンボキャリパー シートヒーター 本革シート	
外色 元色 クロ 色種 カラーNo G41	有		
燃料 ガソリン 内装色			
輸入 年式 輸入区分 ハンドル	月 日		
リサイクル預託金 12,600円	2人	登録No. 土浦 338 も 2	
		車台No. Z33-504132	
		シリアルNo.	

○注意事項（修復・不具合箇所および状態等）

保証書・取説後送

○検査員所見

ルーム内スレ汚れ

Rスポイラーハゲ

ホイールキズ

各キズ凹

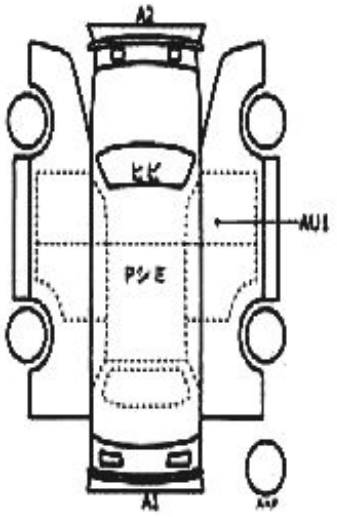

荷台内寸(約)	×	× (cm)
長さ 431 cm	幅 181 cm	高さ 131 cm

GLOSSARY

[1] **Chassis number** – a unique identification number of the vehicle in Japan (same as VIN in the USA or Europe)

[2] **Title information:**
Registered – qualified for driving in Japan
Deregistered Temporarily – not qualified for driving in Japan, usually a temporary title during the ownership change
Deregistered Completely – not qualified for driving in Japan, the vehicle is determined to be scrapped
Deregistered to Export – not qualified for driving in Japan , the vehicle is determined to be exported

[3] **Determining the overall collision safety performance evaluation** – For the driver's seat, the results of the full-wrap frontal collision test, offset frontal collision test, and side collision test are added together and evaluated to 6 different levels. For the Frontal passenger's seat, the results of the full-wrap frontal collision test and the side collision test (results for the driver's or the front passenger's seat are used) are added together and evaluated to 6 different levels.

Regular vehicle inspection – All vehicles in Japan must undergo regular vehicle inspections (shaken). New cars need to be tested after three years, and then vehicles must be tested every two years thereafter. A vehicle inspection (shaken) is compulsory for all vehicles with an engine size over 250cc. It ensures that all vehicles on the road are properly maintained and safe to drive. The test also checks that vehicles have not been illegally modified; if they are found to have been modified, they are not allowed on the road.

[4] **Use in the contaminated regions** – The Fukushima Daiichi nuclear disaster was a catastrophic failure at the Fukushima I Nuclear Power Plant on 11 March 2011, resulting in a meltdown of three of the plant's six nuclear reactors. As a result, some areas in the following prefectures were contaminated: Fukushima, Miyagi, Ibaraki, Tochigi.

[5] **Radioactive contamination test** – radioactive contamination inspection that was started in July 2011 as a preventive measure for exporting contaminated vehicles from Japan. The inspection is being conducted since in all sea ports of Japan under the supervision of The Japan Harbor Transportation Association (JHTA).

MLIT – Ministry of Land, Infrastructure, Transport and Tourism.

[6] **Japan New Car Assessment Program** – the Ministry of Land, Infrastructure, Transport and Tourism (MLIT) and the National Agency for Automotive Safety & Victims' Aid (NASVA) have taken measures for safety, one of which is to assess commercially available vehicles through a variety of safety performance tests and release the resulting information compiled into the "New Car Assessment Program". The objective of Japan New Car Assessment Program is to increase the use of safe automobiles by providing an environment in which users can easily select such vehicles. This also promotes the development of safer vehicles by automobile manufacturers. Neck injury protection for rear-end collision performance test , rear seat passenger's protection for frontal collision performance test, rear passenger's seat belt usability evaluation test and seat belt reminder for passengers evaluation test are started in FY2009.

[7] **Braking Performance Tests** – Braking performance is determined by the shortness of the distance in which a vehicle can stop and the stability of the vehicle at the time of braking. This test is performed under wet and dry road conditions for a vehicle which has both a driver and a front passenger. The distance it takes for the vehicle to stop and the stability of the vehicle at the time of braking is evaluated for when the vehicle is stopped abruptly while traveling at a speed of 100km/h. The stopping distance and vehicle speed have been measured by using GPS since FY2009.

CAR VX, LTD DEPENDS ON ITS SOURCES FOR THE ACCURACY AND RELIABILITY OF ITS INFORMATION.

THEREFORE, NO RESPONSIBILITY IS ASSUMED BY CAR VX, LTD OR ITS AGENTS FOR ERRORS OR OMISSIONS IN THIS REPORT. CAR VX, LTD FURTHER EXPRESSLY DISCLAIMS ALL WARRANTIES, EXPRESSED OR IMPLIED, INCLUDING ANY IMPLIED WARRANTIES OF MERCHANTABILITY OR FITNESS FOR A PARTICULAR PURPOSE.

© 2014-2026 Car VX Limited. All rights reserved.