Vehicle History Report

VEHICLE DETAILS

Chassis number [1]:	VMG-019725
Manufacture date:	2016-09
Make:	SUBARU
Model:	LEVORG
Body:	DBA-VMG
Grade:	2.0 GT-S EYESIGHT
Engine:	FA20
Drive:	4WD
Transmission:	AT

Title information [2]:	**Deregistered Temporarily**	✓
Accident / Repair:	**No problem**	✓
Odometer rollback:	**No problem**	✓
Manufacturer recall:	**No problem**	✓
Safety grade [3]:	★★★★★	✓
Contamination risk:	**No problem**	✓

This CAR VX Vehicle History Report is based only on Information supplied to CAR VX, LTD and available as of 2026-09-19 01:46:51. The information may vary depending on the data received from our data providers. Some data may be incomplete or unavailable due to human error, information that was not digitized at the time, or data that was simply not reported to the databases. This report should be used as a decision-support tool alongside a vehicle inspection and test drive.

ACCIDENT / REPAIR HISTORY

Problem type	Reported	Date reported	Data source	Details	Airbag
Collision	Not reported				
Malfunction	Not reported				
Theft	Not reported				
Fire damage	Not reported				
Water damage	Not reported				
Hail damage	Not reported				

ODOMETER READINGS HISTORY

Date reported	Data source	Odometer reading (Km)
2023-09-14	MLIT	88900
2025-09-08	MLIT	110200
2026-09-17	USS Tokyo	119300

USE HISTORY

Use in the contaminated regions [4]	Radioactive contamination test fail [5]	Commercial use
Not reported	Not reported	Not reported

DETAILED HISTORY

Event date	Location	Odometer reading (Km)	Data source	Details
2016-09			SUBARU	Manufactured
2016-09			MLIT	First registration
2023-09-14		88900	MLIT	Inspection
2025-09-08	Sapporo	110200	MLIT	Inspection
2026-09-16	Sapporo		MLIT	Last registration

2026-09-17	Chiba	119300	USS Tokyo	Auctioned

MANUFACTURER RECALL HISTORY

Date reported	Data source	Affected part	Details
Not reported			

VEHICLE ASSESSMENT [6]

Overall Collision Safety Ratings

Driver's seat			Front passenger's seat		
Points	Evaluation	Goal average	Points	Evaluation	Goal average
11.16	★★★★★	93%	9.81	★★★★	82%

* In order to accurately differentiate between the evaluations of different vehicles, a standard is set based on current technology. Up to 6 points out of 12 is given level 1 and the rest of the range is divided up into equal parts, which are respectively assigned to level 2 (more than 6 points but 7.5 or less), level 3 (more than 7.5 points but 9 or less), level 4 (more than 9 points but 10.5 or less) or level 5 (more than 10.5 points).

Braking performance tests [7]

Dry road		39.1 m
Wet road		40.9 m

VEHICLE SPECIFICATION

1st gear ratio	3.105	**2nd gear ratio**	1.983
3rd gear ratio	1.454	**4th gear ratio**	1.057
5th gear ratio	0.779	**6th gear ratio**	0.542
Additional notes		**Airbag position, capacity**	
Body rear overhang		**Body type**	WAGON

Chassis number embossing position		**Classification code**	1002
Cylinders		**Displacement**	1990
Electric engine type		**Electric engine maximum output**	
Electric engine maximum torque		**Electric engine power**	
Engine maximum power	300PS(221KW)/5600RPM	**Engine maximum torque**	408KG*M(4000NM)/2000RPM ~4800
Engine model	FA20	**Frame type**	
Front shaft weight	930	**Front shock absorber type**	STRUT TYPE INDEPENDENT SUSPENSION
Front stabilizer type		**Front tires size**	225/45R18
Front tread	1530	**Fuel consumption**	
Fuel tank equipment	60	**Grade**	2.0 GT-S EYESIGHT
Height	149	**Length**	469
Main brakes type		**Make**	SUBARU
Maximum speed		**Minimum ground clearance**	
Minimum turning radius	5500	**Model**	LEVORG
Model code	DBA-VMG	**Mufflers number**	
Rear shaft weight	630	**Rear shock absorber type**	DOUBLE WISHBONE INDEPENDENT SUSPENSION
Rear stabilizer type		**Rear tires size**	225/45R18
Rear tread	1540	**Reverse ratio**	2.077
Riding capacity	5	**Side brakes type**	
Specification code	17725	**Stopping distance**	
Transmission type	AT	**Weight**	1560
Wheel alignment	4WD	**Wheelbase**	2650
Width	178		

AUCTION DATA

Date: 2026-09-17, Auction: USS Tokyo, Lot #: 29464

Date:	2026-09-17	Lot #:	29464
Auction name:	USS Tokyo	Region:	Chiba
Make:	SUBARU	Model:	LEVORG
Reg. year:	2016	Mileage (km):	119300
Displacement (cc):	2000	Transmission:	FA
Color:	PEARL	Model code:	VMG
Result:	available	Auction grade:	4
Problem type:	No problem	Problem scale:	None
Contaminated:	No	Airbag:	OK

PHOTOS AND AUCTION SHEETS

プライムRコーナー

29464	車種	排気量 2000	型式 DBA-VMG		評価点 4
	初度登録年月 H28/9月	車名 スバル レヴォーグ	型式・ドア数 VMG	グレード 2.0GT-Sアイサイト	駆動 4WD
					内装 B

車検 年 月 日	シフト FAT	特定 SR / 純AW / PS / PW / カワ / TV / ナビ / エアロ	
走行 119,300 km	冷房 AAC	セールスポイント	
外色 元色 パール / 色調 / カラー No. K1X	有	★純正DIATONEナビ★バックカメラ★	
燃料 ガソリン	内装色 ブラック系	★ETC★フルセグ★クルコン★	
輸入車 年式 / 輸入区分 / ハンドル	月 日	★車載機レーダー(OBDⅡ接続)★	
		★社外18インチAW夏装着★	
		★ハーフレザーシート★	
リサイクル預託金 13,610円	5人	車台No. VMG-019725	
		シリアルNo.	

○注意事項(修復・不具合箇所および状態等)

保証書・取説後日

○検査員所備

ハンドルシートスレ

トリムキズ

ホイールキズ

下廻りサビ腐食

各キズ凹

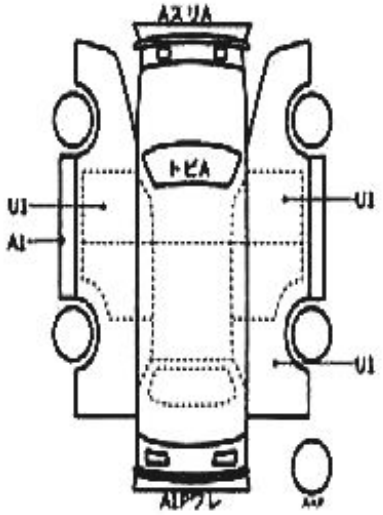

両台内寸(約)	×	× (cm)
長さ 469 cm	幅 178 cm	高さ 149 cm

GLOSSARY

[1] **Chassis number** – a unique identification number of the vehicle in Japan (same as VIN in the USA or Europe)

[2] **Title information:**
Registered – qualified for driving in Japan
Deregistered Temporarily – not qualified for driving in Japan, usually a temporary title during the ownership change
Deregistered Completely – not qualified for driving in Japan, the vehicle is determined to be scrapped
Deregistered to Export – not qualified for driving in Japan , the vehicle is determined to be exported

[3] **Determining the overall collision safety performance evaluation** – For the driver's seat, the results of the full-wrap frontal collision test, offset frontal collision test, and side collision test are added together and evaluated to 6 different levels. For the Frontal passenger's seat, the results of the full-wrap frontal collision test and the side collision test (results for the driver's or the front passenger's seat are used) are added together and evaluated to 6 different levels.

Regular vehicle inspection – All vehicles in Japan must undergo regular vehicle inspections (shaken). New cars need to be tested after three years, and then vehicles must be tested every two years thereafter. A vehicle inspection (shaken) is compulsory for all vehicles with an engine size over 250cc. It ensures that all vehicles on the road are properly maintained and safe to drive. The test also checks that vehicles have not been illegally modified; if they are found to have been modified, they are not allowed on the road.

[4] **Use in the contaminated regions** – The Fukushima Daiichi nuclear disaster was a catastrophic failure at the Fukushima I Nuclear Power Plant on 11 March 2011, resulting in a meltdown of three of the plant's six nuclear reactors. As a result, some areas in the following prefectures were contaminated: Fukushima, Miyagi, Ibaraki, Tochigi.

[5] **Radioactive contamination test** – radioactive contamination inspection that was started in July 2011 as a preventive measure for exporting contaminated vehicles from Japan. The inspection is being conducted since in all sea ports of Japan under the supervision of The Japan Harbor Transportation Association (JHTA).

MLIT – Ministry of Land, Infrastructure, Transport and Tourism.

[6] **Japan New Car Assessment Program** – the Ministry of Land, Infrastructure, Transport and Tourism (MLIT) and the National Agency for Automotive Safety & Victims' Aid (NASVA) have taken measures for safety, one of which is to assess commercially available vehicles through a variety of safety performance tests and release the resulting information compiled into the "New Car Assessment Program". The objective of Japan New Car Assessment Program is to increase the use of safe automobiles by providing an environment in which users can easily select such vehicles. This also promotes the development of safer vehicles by automobile manufacturers. Neck injury protection for rear-end collision performance test , rear seat passenger's protection for frontal collision performance test, rear passenger's seat belt usability evaluation test and seat belt reminder for passengers evaluation test are started in FY2009.

[7] **Braking Performance Tests** – Braking performance is determined by the shortness of the distance in which a vehicle can stop and the stability of the vehicle at the time of braking. This test is performed under wet and dry road conditions for a vehicle which has both a driver and a front passenger. The distance it takes for the vehicle to stop and the stability of the vehicle at the time of braking is evaluated for when the vehicle is stopped abruptly while traveling at a speed of 100km/h. The stopping distance and vehicle speed have been measured by using GPS since FY2009.

CAR VX, LTD DEPENDS ON ITS SOURCES FOR THE ACCURACY AND RELIABILITY OF ITS INFORMATION.

THEREFORE, NO RESPONSIBILITY IS ASSUMED BY CAR VX, LTD OR ITS AGENTS FOR ERRORS OR OMISSIONS IN THIS REPORT. CAR VX, LTD FURTHER EXPRESSLY DISCLAIMS ALL WARRANTIES, EXPRESSED OR IMPLIED, INCLUDING ANY IMPLIED WARRANTIES OF MERCHANTABILITY OR FITNESS FOR A PARTICULAR PURPOSE.

© 2014-2026 Car VX Limited. All rights reserved.