Vehicle History Report

VEHICLE DETAILS

Chassis number [1]:	GSC10-6000942
Manufacture date:	2015-07
Make:	LEXUS
Model:	RC350
Body:	DBA-GSC10
Grade:	F SPORT
Engine:	2GR-FKS
Drive:	2WD
Transmission:	AT

Title information [2]:	**Deregistered to Export**	✓
Accident / Repair:	**No problem**	✓
Odometer rollback:	**No problem**	✓
Manufacturer recall:	**No problem**	✓
Safety grade [3]:	**No data**	✓
Contamination risk:	**No problem**	✓

This CAR VX Vehicle History Report is based only on Information supplied to CAR VX, LTD and available as of 2026-08-04 18:34:56. Other information about this vehicle, including problems, may not have been reported to CAR VX, LTD . Use this report as one important tool, along with a vehicle inspection and test drive, to make a better decision about your next used car.

ACCIDENT / REPAIR HISTORY

Problem type	Reported	Date reported	Data source	Details	Airbag
Collision	Not reported				
Malfunction	Not reported				
Theft	Not reported				
Fire damage	Not reported				
Water damage	Not reported				
Hail damage	Not reported				

ODOMETER READINGS HISTORY

Date reported	Data source	Odometer reading (Km)
2022-06-23	MLIT	88400
2024-07-02	MLIT	112500
2026-06-30	USS Yokohama	133000

USE HISTORY

Use in the contaminated regions [4]	Radioactive contamination test fail [5]	Commercial use
Not reported	Not reported	Not reported

DETAILED HISTORY

Event date	Location	Odometer reading (Km)	Data source	Details
2015-07			LEXUS	Manufactured
2015-07			MLIT	First registration
2022-06-23		88400	MLIT	Inspection
2024-07-02	Yokohama	112500	MLIT	Inspection
2026-06-12	Yokohama		MLIT	Last registration

2026-06-30	Kanagawa	133000	USS Yokohama	Auctioned

MANUFACTURER RECALL HISTORY

Date reported	Data source	Affected part	Details
Not reported			

VEHICLE ASSESSMENT [6]

Overall Collision Safety Ratings

Driver's seat			Front passenger's seat		
Points	Evaluation	Goal average	Points	Evaluation	Goal average
0		0%	0		0%

* In order to accurately differentiate between the evaluations of different vehicles, a standard is set based on current technology. Up to 6 points out of 12 is given level 1 and the rest of the range is divided up into equal parts, which are respectively assigned to level 2 (more than 6 points but 7.5 or less), level 3 (more than 7.5 points but 9 or less), level 4 (more than 9 points but 10.5 or less) or level 5 (more than 10.5 points).

Braking performance tests [7]

Dry road 

Wet road 

VEHICLE SPECIFICATION

1st gear ratio	4.596	**2nd gear ratio**	2.724
3rd gear ratio	1.863	**4th gear ratio**	1.464
5th gear ratio	1.231	**6th gear ratio**	1.0
Additional notes		**Airbag position, capacity**	
Body rear overhang		**Body type**	COUPE

Chassis number embossing position		**Classification code**	2
Cylinders		**Displacement**	3450
Electric engine type		**Electric engine maximum output**	
Electric engine maximum torque		**Electric engine power**	
Engine maximum power	318PS(234KW)/6400RPM	**Engine maximum torque**	38.7KG*M(3800NM)/4800RPM
Engine model	2GR-FKS	**Frame type**	
Front shaft weight	910	**Front shock absorber type**	DOUBLE WISHBONE (WITH STABILIZER)
Front stabilizer type		**Front tires size**	235/45R18 94Y
Front tread	1580	**Fuel consumption**	
Fuel tank equipment	66	**Grade**	F SPORT
Height	139	**Length**	469
Main brakes type		**Make**	LEXUS
Maximum speed		**Minimum ground clearance**	
Minimum turning radius	5.2	**Model**	RC350
Model code	DBA-GSC10	**Mufflers number**	
Rear shaft weight	790	**Rear shock absorber type**	MULTI LINK (WITH STABILIZER)
Rear stabilizer type		**Rear tires size**	235/45R18 94Y
Rear tread	1600	**Reverse ratio**	4.056
Riding capacity	4	**Side brakes type**	
Specification code	17833	**Stopping distance**	
Transmission type	AT	**Weight**	1690
Wheel alignment	2WD	**Wheelbase**	2730
Width	184		

AUCTION DATA

Date: 2026-06-30, Auction: USS Yokohama, Lot #: 30065

Date:	2026-06-30	Lot #:	30065
Auction name:	USS Yokohama	Region:	Kanagawa
Make:	LEXUS	Model:	RC
Reg. year:	2015	Mileage (km):	133000
Displacement (cc):	3500	Transmission:	FA
Color:	RED	Model code:	GSC10
Result:	available	Auction grade:	4
Problem type:	No problem	Problem scale:	None
Contaminated:	No	Airbag:	OK

PHOTOS AND AUCTION SHEETS

国産プライムコーナー

No.	車歴	排気量	型式	評価点
30065		3500	DBA-GSC10	4

初度登録年月	車名	ボディ・ドア数	グレード	駆動	内装
H27/7月	レクサス RC	CP	RC350 Fスポーツ	2WD	B

車検 年 月 日	シフト FAT	補正部 SR (純AW) (PS) (PW) (カワ) (TV) (ナビ) (エアB)	
走行 133,000 km	冷房 AAC	セールスポイント ☆LEDヘッドライト ☆バックモニター ☆クルコン ☆ETC	
外色 元色 色替 レッド →	カラーNo. 3T5		
燃料 ガソリン	内装色		
輸入車用 年式	輸入区分	ハンドル	
強制	有		
強制有効期限 月 日			

リサイクル預託金 12,420円	標準定員 4人	最大積量 t	
登録No.			
車台No.	GSC10-6000942		
シリアルNo.			

○注意事項（修復・不具合箇所および状態等）

☆内外装仕上げ済み

☆取、保、キー後送

○検査員報告

ルーム内スレ汚れ

シートヘタリ、1部ハゲ、切れ

ウスキズ

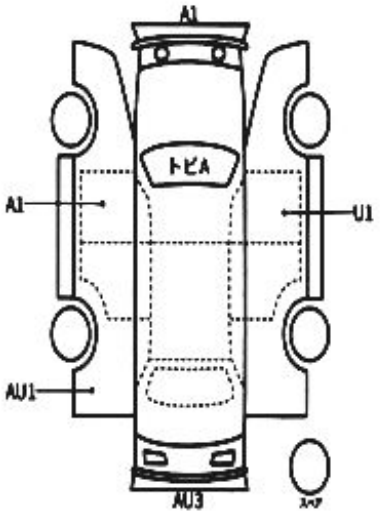

BOX

荷台内寸 約	×	× (cm)
長さ 469 cm	幅 184 cm	高さ 139 cm

GLOSSARY

[1] **Chassis number** – a unique identification number of the vehicle in Japan (same as VIN in the USA or Europe)

[2] **Title information:**
Registered – qualified for driving in Japan
Deregistered Temporarily – not qualified for driving in Japan, usually a temporary title during the ownership change
Deregistered Completely – not qualified for driving in Japan, the vehicle is determined to be scrapped
Deregistered to Export – not qualified for driving in Japan , the vehicle is determined to be exported

[3] **Determining the overall collision safety performance evaluation** – For the driver's seat, the results of the full-wrap frontal collision test, offset frontal collision test, and side collision test are added together and evaluated to 6 different levels. For the Frontal passenger's seat, the results of the full-wrap frontal collision test and the side collision test (results for the driver's or the front passenger's seat are used) are added together and evaluated to 6 different levels.

Regular vehicle inspection – All vehicles in Japan must undergo regular vehicle inspections (shaken). New cars need to be tested after three years, and then vehicles must be tested every two years thereafter. A vehicle inspection (shaken) is compulsory for all vehicles with an engine size over 250cc. It ensures that all vehicles on the road are properly maintained and safe to drive. The test also checks that vehicles have not been illegally modified; if they are found to have been modified, they are not allowed on the road.

[4] **Use in the contaminated regions** – The Fukushima Daiichi nuclear disaster was a catastrophic failure at the Fukushima I Nuclear Power Plant on 11 March 2011, resulting in a meltdown of three of the plant's six nuclear reactors. As a result, some areas in the following prefectures were contaminated: Fukushima, Miyagi, Ibaraki, Tochigi.

[5] **Radioactive contamination test** – radioactive contamination inspection that was started in July 2011 as a preventive measure for exporting contaminated vehicles from Japan. The inspection is being conducted since in all sea ports of Japan under the supervision of The Japan Harbor Transportation Association (JHTA).

MLIT – Ministry of Land, Infrastructure, Transport and Tourism.

[6] **Japan New Car Assessment Program** – the Ministry of Land, Infrastructure, Transport and Tourism (MLIT) and the National Agency for Automotive Safety & Victims' Aid (NASVA) have taken measures for safety, one of which is to assess commercially available vehicles through a variety of safety performance tests and release the resulting information compiled into the "New Car Assessment Program". The objective of Japan New Car Assessment Program is to increase the use of safe automobiles by providing an environment in which users can easily select such vehicles. This also promotes the development of safer vehicles by automobile manufacturers. Neck injury protection for rear-end collision performance test , rear seat passenger's protection for frontal collision performance test, rear passenger's seat belt usability evaluation test and seat belt reminder for passengers evaluation test are started in FY2009.

[7] **Braking Performance Tests** – Braking performance is determined by the shortness of the distance in which a vehicle can stop and the stability of the vehicle at the time of braking. This test is performed under wet and dry road conditions for a vehicle which has both a driver and a front passenger. The distance it takes for the vehicle to stop and the stability of the vehicle at the time of braking is evaluated for when the vehicle is stopped abruptly while traveling at a speed of 100km/h. The stopping distance and vehicle speed have been measured by using GPS since FY2009.

CAR VX, LTD DEPENDS ON ITS SOURCES FOR THE ACCURACY AND RELIABILITY OF ITS INFORMATION.

THEREFORE, NO RESPONSIBILITY IS ASSUMED BY CAR VX, LTD OR ITS AGENTS FOR ERRORS OR OMISSIONS IN THIS REPORT. CAR VX, LTD FURTHER EXPRESSLY DISCLAIMS ALL WARRANTIES, EXPRESSED OR IMPLIED, INCLUDING ANY IMPLIED WARRANTIES OF MERCHANTABILITY OR FITNESS FOR A PARTICULAR PURPOSE.

© 2014-2026 Car VX Limited. All rights reserved.